REVISIONS				
REV. SYM.	E.C.O. NUMBER	DESCRIPTION	BY DATE	APP'D DATE
1		ORIGINAL RELEASE	TD 12/4/09	

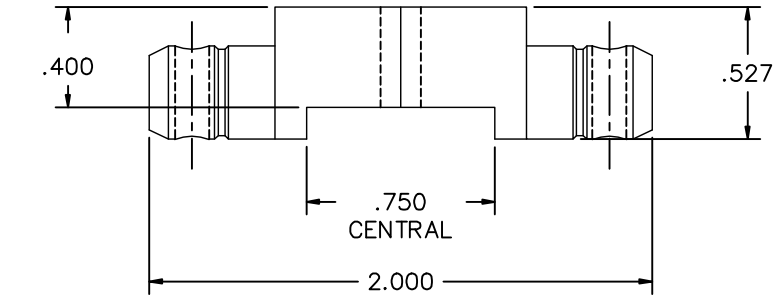

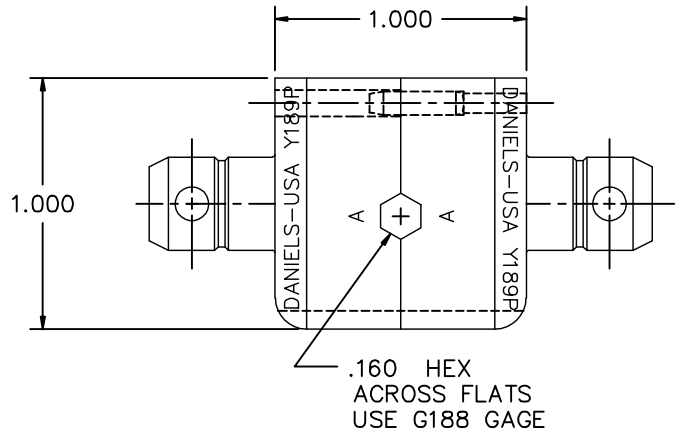

UNCONTROLLED DOCUMENT
WILL NOT BE UPDATED

RESTRICTED & CONFIDENTIAL

CONFIDENTIAL PROPERTY OF DANIELS MANUFACTURING CORP. NOT TO BE DISCLOSED TO OTHERS, REPRODUCED OR USED FOR ANY OTHER PURPOSE, EXCEPT AS AUTHORIZED IN WRITING BY DANIELS MANUFACTURING. MUST BE RETURNED TO DANIELS MANUFACTURING CORP. ON COMPLETION OF ORDER OR OTHER PURPOSE FOR WHICH LENT.

DO NOT SCALE DRAWING

MATERIAL

HEAT TREAT

FINISH

ITEM	PART NO.	QTY.	DESCRIPTION/REMARKS

DRN. Tony Dilworth DATE 12/4/09
CHK'D. DATE
APP'D. DATE
APP'D. DATE

NOTE:
THIS DRAWING IS AN OUTLINE DRAWING OF THE RESPECTIVE DMC PART NUMBER INDICATED. ACTUAL DMC PART NUMBER IS DRAWING NUMBER WITHOUT THE "-ENV" SUFFIX.

DMC DANIELS MANUFACTURING CORP.
ORLANDO, FLORIDA
CAGE 11851

TITLE
DIE SET
ENVELOPE DRAWING

WHERE USED:

SIZE	SCALE	CAD P/N	SHEET 1 OF 1
B	2/1	Y189P-ENV	

POSTING

DWG. NO. Y189P-ENV REV. 1